EMERGENCY TRANSFER CONTROLS
DESIGNS - CONTROLS - APPLICATIONS

251 Nuthatch Court, Three Bridges, NJ 08887
Office: 908-782-1794, Fax: 908-782-0749

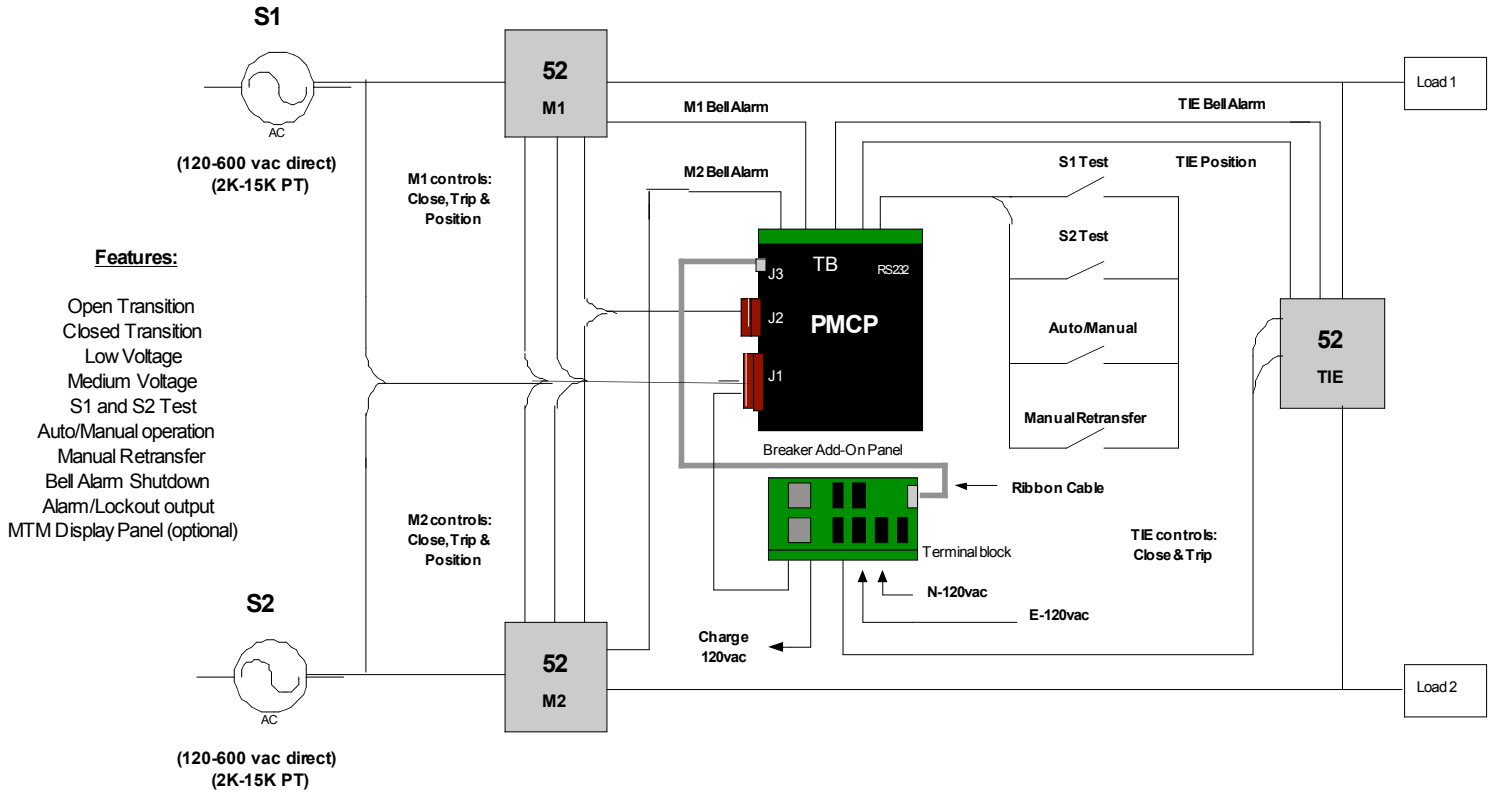

PMCP and Breaker Add-On Panel operating a Main-Tie-Main

Diagram 1